THE INFORMATION CONTAINED IN THIS DRAWING IS THE SOLE PROPERTY OF L-COM, INC. ANY REPRODUCTION IN PART OR WHOLE WITHOUT THE WRITTEN PERMISSION OF L-COM, INC. IS PROHIBITED.

REVISIONS

REV	DESCRIPTION	DATE	APPROVED
A	INITIAL RELEASE	9/22/15	D.GRIFFIN

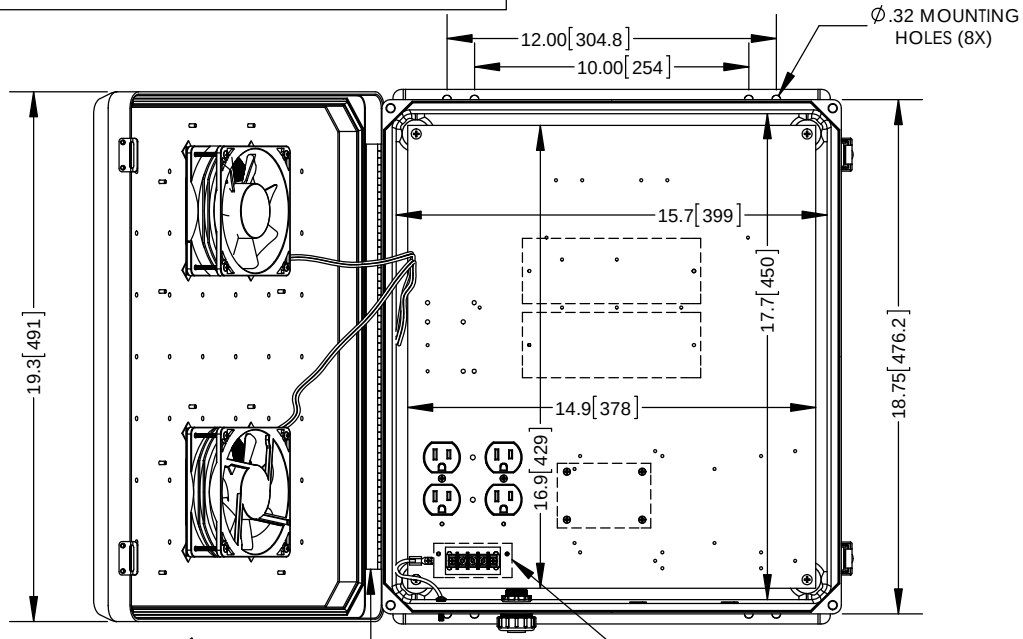

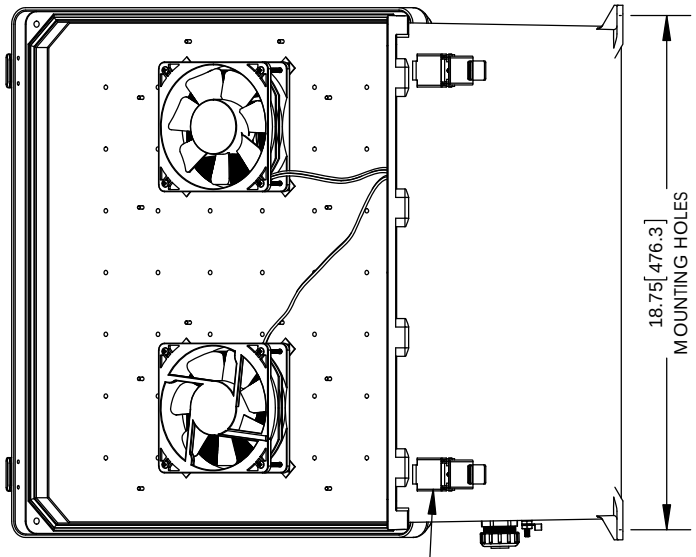

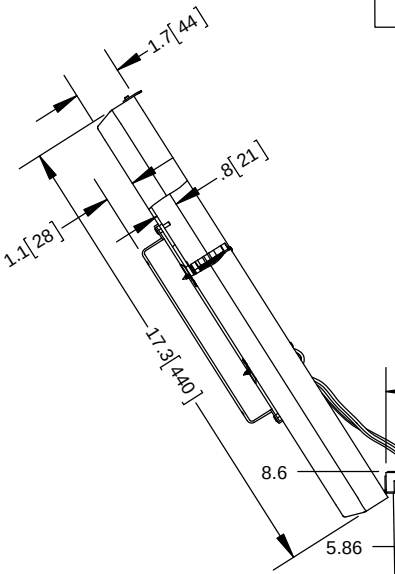

NOTE:
1- ENCLOSURE MATERIAL-BLACK
HOT MOLDED FIBERGLASS REINFORCED POLYESTER
2- NEMA RATED TYPE 3, 3R, 3S, 4, 4X, 12 AND 13 PRIOR TO MODIFICATIONS.
3- ICE 529 RATED IP 66 PRIOR TO MODIFICATION.
4- TEMPERATURE RANGE FROM -50 DEG C TO 150 DEG C.
5- SELF EXTINGUISHING AND HALOGEN FREE.
6- CABINETS ARE MAINTENANCE FREE AND CORROSION RESISTANT.
7- SHALL BE PACKAGED AS PER L-COM SPEC PKG-00070
8- ALL DIMENSIONS FOR REFERENCE ONLY.

REGULATORY COMPLIANCE:
CE2011/65/EU(RoHS DIRECTIVE)

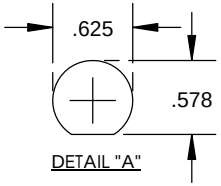

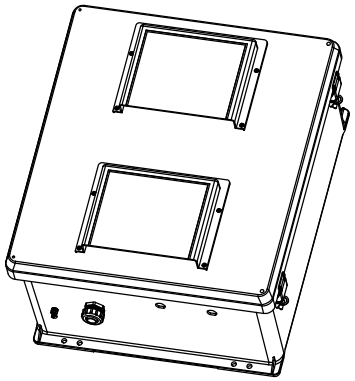

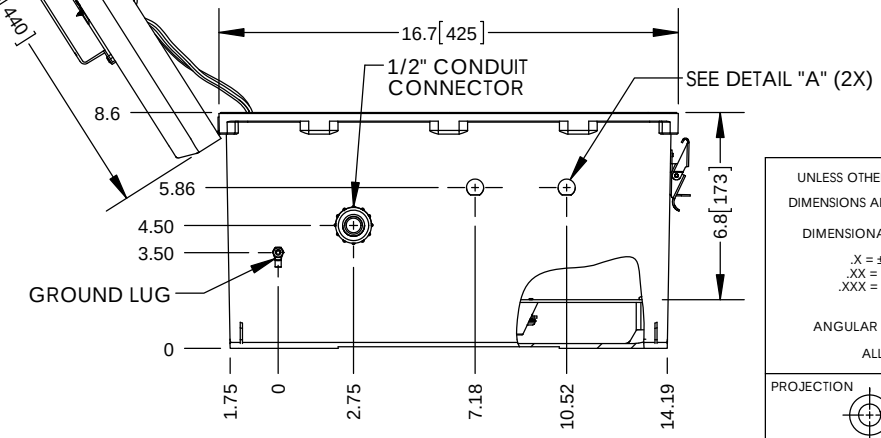

UNLESS OTHERWISE SPECIFIED,
DIMENSIONS ARE IN INCHES [mm]
DIMENSIONAL TOLERANCES:
.X = ±.1 [2.54]
.XX = ±.01 [.25]
.XXX = ±.005 [.13]
ANGULAR TOLERANCES:
ALL = ± 1°
PROJECTION

APPROVALS		DATE
DRAWN BY	B.PUCHASKI	09/14/15
CHECKED BY	K.BURGNER	09/14/15
APPROVED BY	P.PESA	09/14/15

CONFIGURATION DETAILS OF UNDIMENSIONED FEATURES MAY VARY

COLOR VARIATIONS MAY OCCUR

L-COM Global Connectivity
45 BEECHWOOD DRIVE
NORTH ANDOVER, MA
01845

CATEGORY
ENCLOSURE

PRODUCT DESCRIPTION
NEMA ENCLOSURE 18 X 16 X 8 WEATHERPROOF 120VAC W/HEATER, FAN, SOLID STATE CONTROLLER, BLACK

SIZE	FSCM NO.	DWG. NO.	REV.
A	43321	NBB181608-1HFS	A

SCALE: NONE | CAD FILE: NBB181608-1HFS.SLDDRW | SHEET 1 OF 1